REVISION HISTORY			
REV	DESCRIPTION	DATE	BY
1	Holes moved, etching changed	18-08-2015	IG
2	Spigot and gasket added	25-08-2015	IG
3	Drain moved	07-09-2015	IG

Imperial VALVE

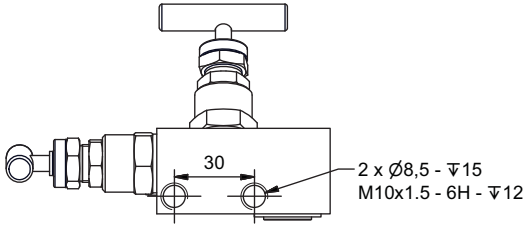

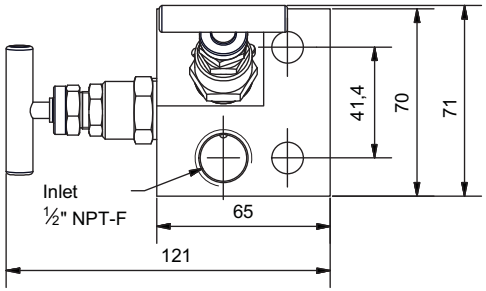

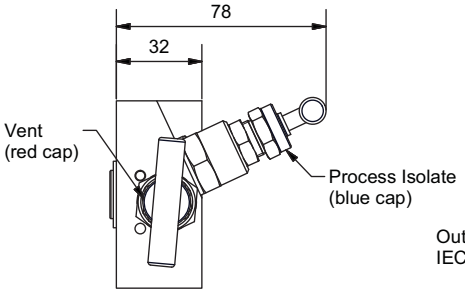

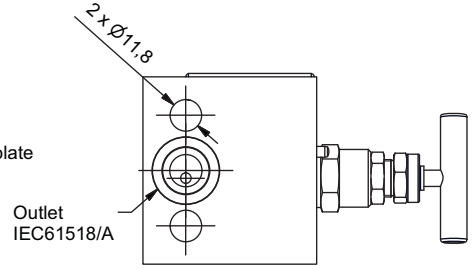

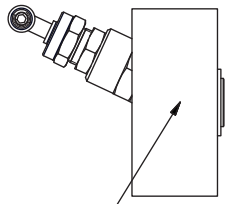

Marking to be etched:
Logo
6000 PSI-AISI316
S62NHD8S-SSB
½"NPT-F x IEC 61518/A
HT._____ 2015

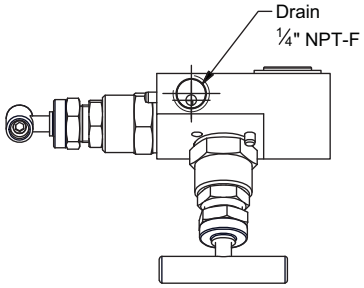

Bonnet gasket material		
Type	Grafoil	PTFE
Process Isolate		
Vent		
IEC 61518/A		

FLOW DIAGRAM

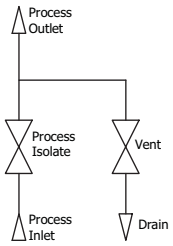

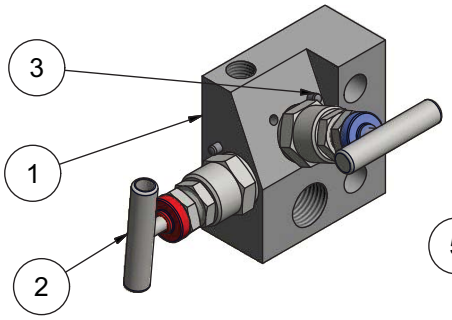

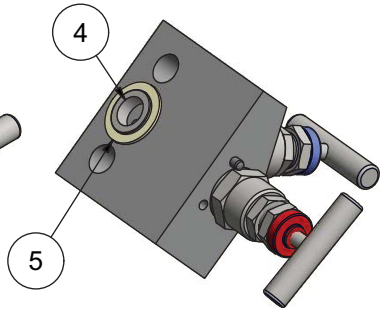

Tested according to A.P.I.598
Test Pressure = 621 barg

Parts List					
ITEM	QTY	PART	MATERIAL	DWG/ PART NO.	HEAT NO.
1	1	Manifold Housing	AISI 316	07-02-1151-0	
2	2	Bonnet Type SN - T bar	AISI 316	07-00-0200	
3	2	Pin Ø4 x 10 - ISO 8764	AISI 316		
Included Accessories					
ITEM	QTY	PART	MATERIAL	DWG/ PART NO.	HEAT NO.
4	1	Spigot	AISI 316	3-29-0102	
5	1	Gasket		7-00-0601	
6	1	Plug 1/4" NPT	AISI 316	03-09-0202	
7	2	Bolt 7/16" UNF x 1 3/4"	TBC		

Scale	Size		Date	Sign.	2 valve manifold 2T00.302G0601 Assembly - ½"NPT-F / IEC61518/A	Gen. tolerances: ISO 2768 m
1 : 2	A3	Draw.	26-11-2014	MP		Drawing No.: 07-02-1150-3
Weight: 0.4 kg		Check				Order No.: